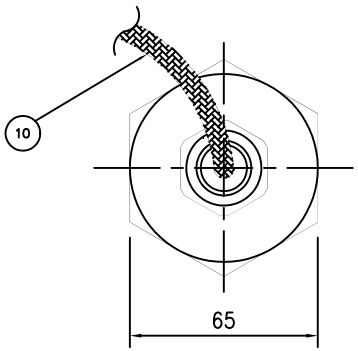

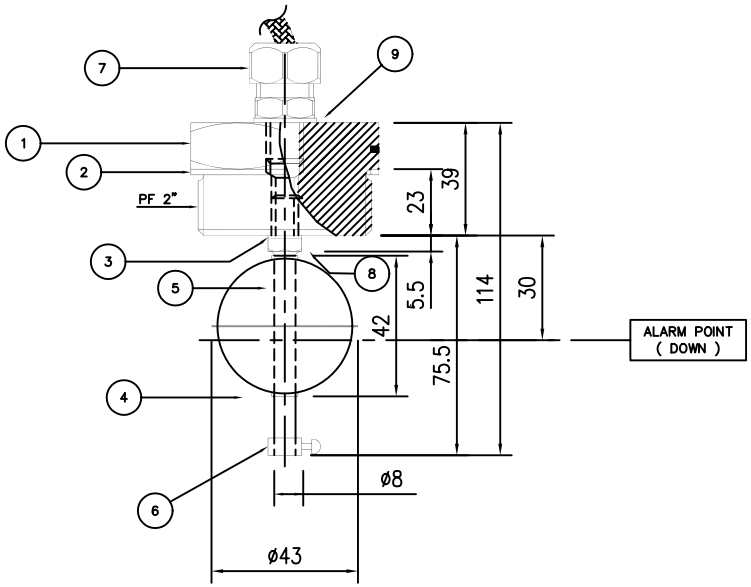

CONNECTION

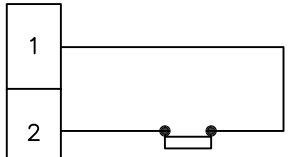

LOW ALARM

NORMAL CLOSE
(Float up : "B" contact)

NO.	N A M E	MAT'L	SIZE	Q'TY	REMARKS
10	CABLE		ø6	1M	
9	PACKING	COPPER	2t	1	
8	HEAD FITTING	SUS304		1	
7	CONNECTOR	ZnDC.2	WBG #10	1	SAMWHA
6	STOPPER	SUS304		1	
5	GUIDE PIPE	SUS304	ø8	1	
4	FLOAT	SUS316		1	
3	PACKING	COPPER	2t	1	LOCTITE NO. 577
2	PACKING	COPPER	2t	1	
1	PLUG	SS41	NVB 65	1	Cr COATING

SHT. NO. 1

This drawing is the property of CMR KOREA Co.,Ltd. and must not be wholly or partly copied, reproduced, utilized or published without written consent.
This is a CADAM drawing and should not be corrected by hand.

GENERAL TOLERANCE FOR BOX OUTLINE			GENERAL TOLERANCE FOR SENSOR & FITTING HOLE		
NOMINAL MEASURE		TOLERANCES	NOMINAL MEASURE		TOLERANCES
OVER	MAX.		OVER	MAX.	
1	100	± 1.0	1	4	± 0.3
100	200	± 2.0	4	16	± 0.5
200	500	± 3.0	16	63	± 1.0
500	1000	± 5.0	63	250	± 2.0
1000	2000	± 7.0	250	1000	± 2.5

REV.	LOC	DATE	NOTE
△			
△			

APPD	20040409	P. H. LEE	TITLE	PROJE-CTION	N / A
CHKD	20040409	S. M. SON	Mounting of Level Switch Type : LAL 25	UNIT	mm
DWG.	20040409	J. H. LEE		SCALE	N / S

SIZE A4

CMR KOREA CO., LTD.

DRAWING NO. LVL02-01006